MODEL DL600A

600lb/272kg CAPACITY
PULLING WINCH

FRONT & SIDE VIEW

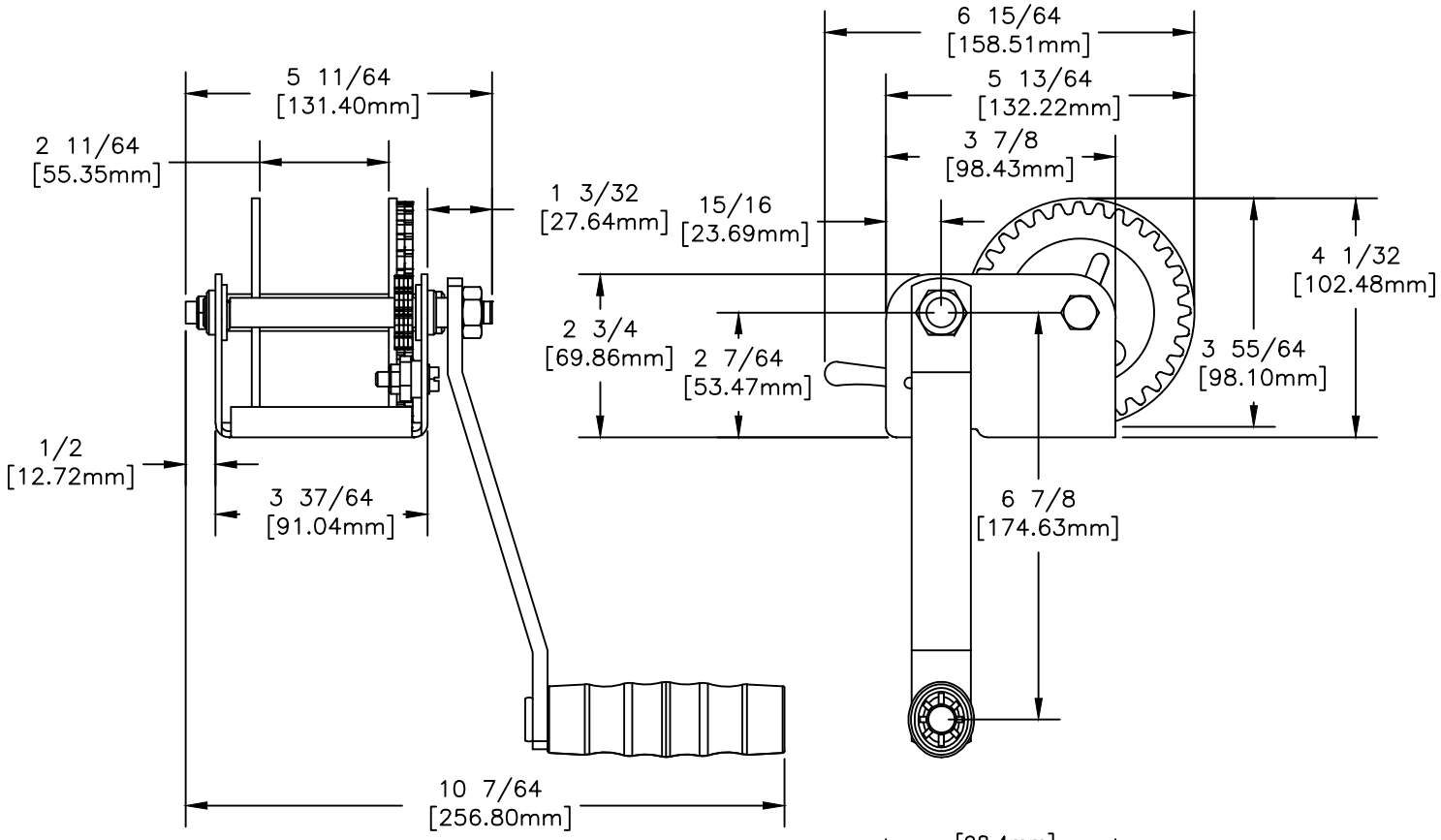
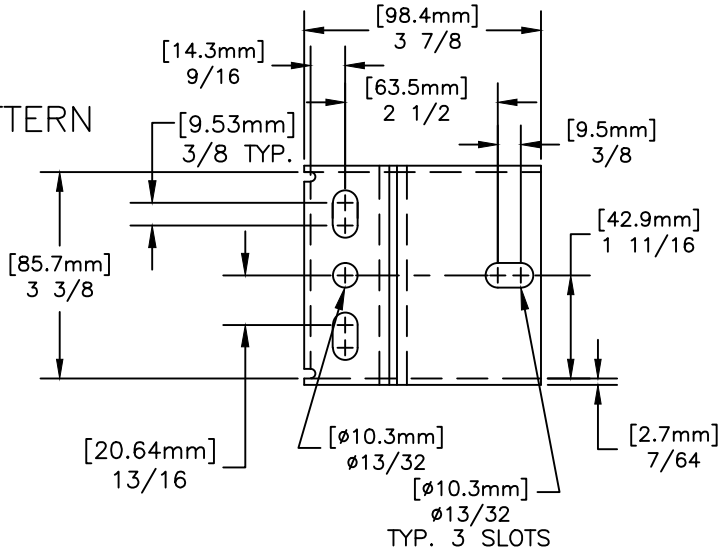
BASE HOLE PATTERN