6389

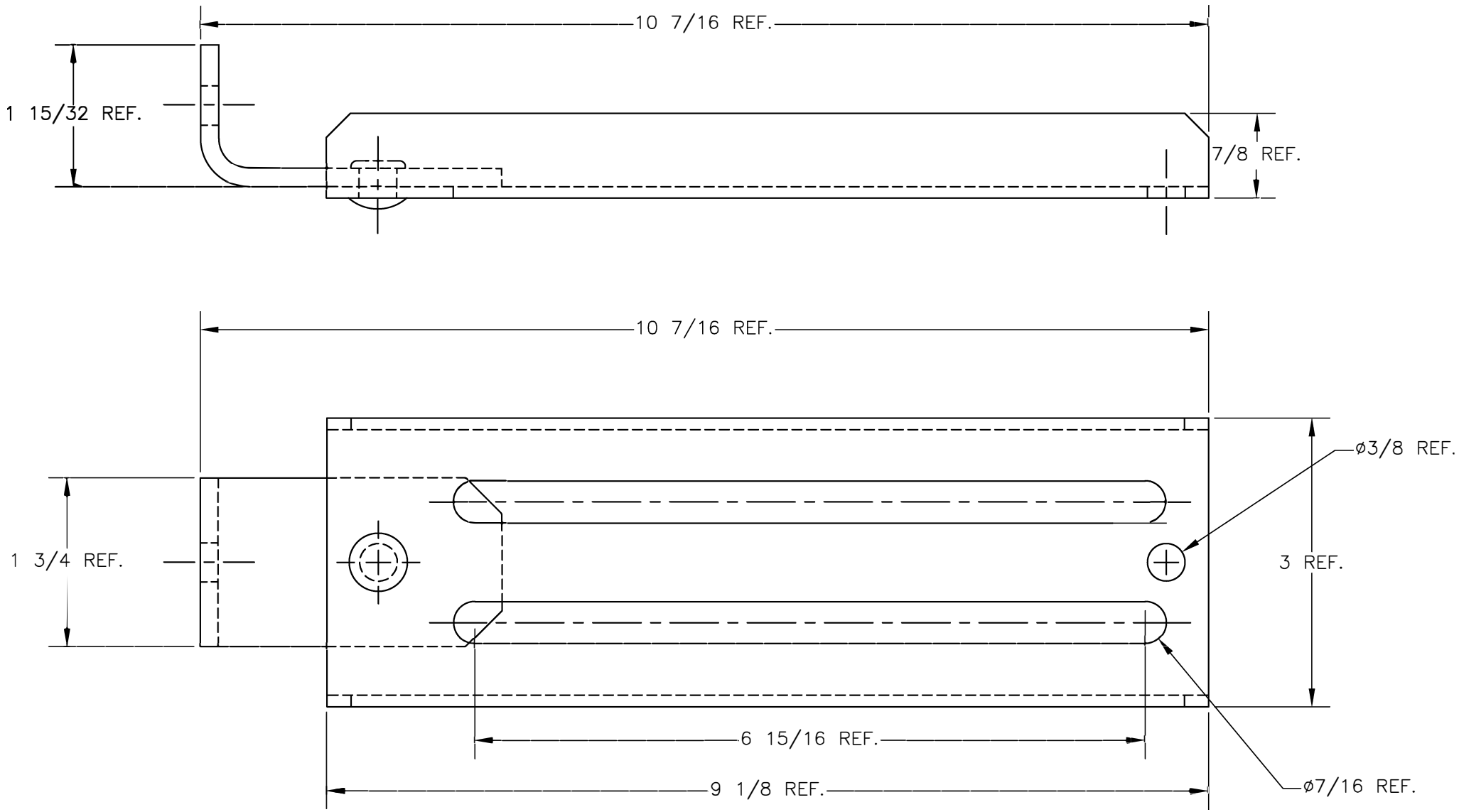
10 7/16 REF.
1 15/32 REF.
7/8 REF.
10 7/16 REF.
ø3/8 REF.
1 3/4 REF.
3 REF.
6 15/16 REF.
9 1/8 REF.
ø7/16 REF.