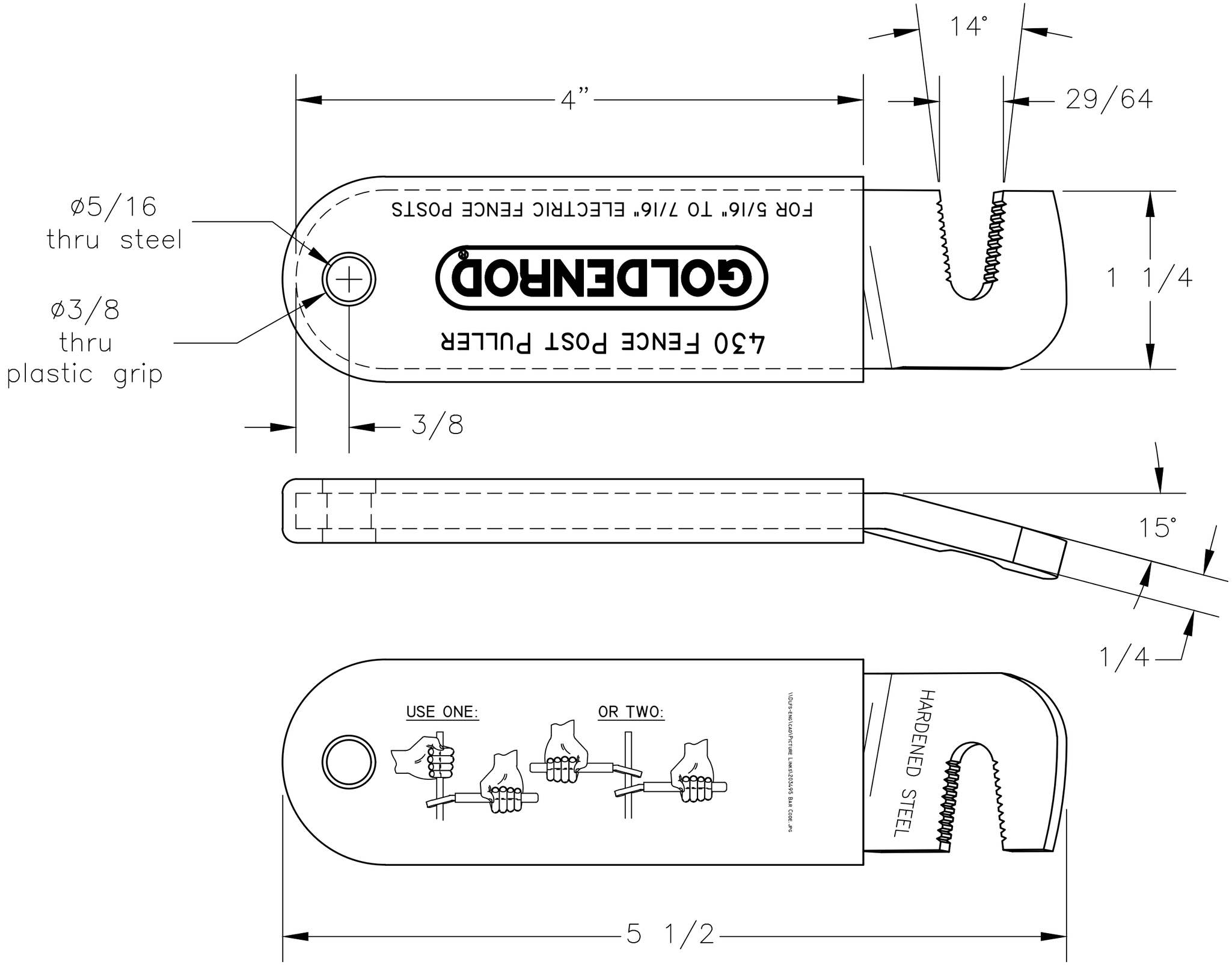
14°
4”
29/64
ø5/16
thru steel
ø3/8
thru
plastic grip
GOLDENROD
430 FENCE POST PULLER
FOR 5/16" TO 7/16" ELECTRIC FENCE POSTS
1 1/4
3/8
15°
1/4
USE ONE:
OR TWO:
HARDENED STEEL
5 1/2