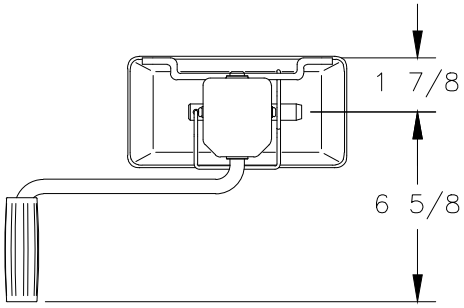


MODEL
7201
2500lb/1134kg CAPACITY
MARINE JACK
P/N 22320

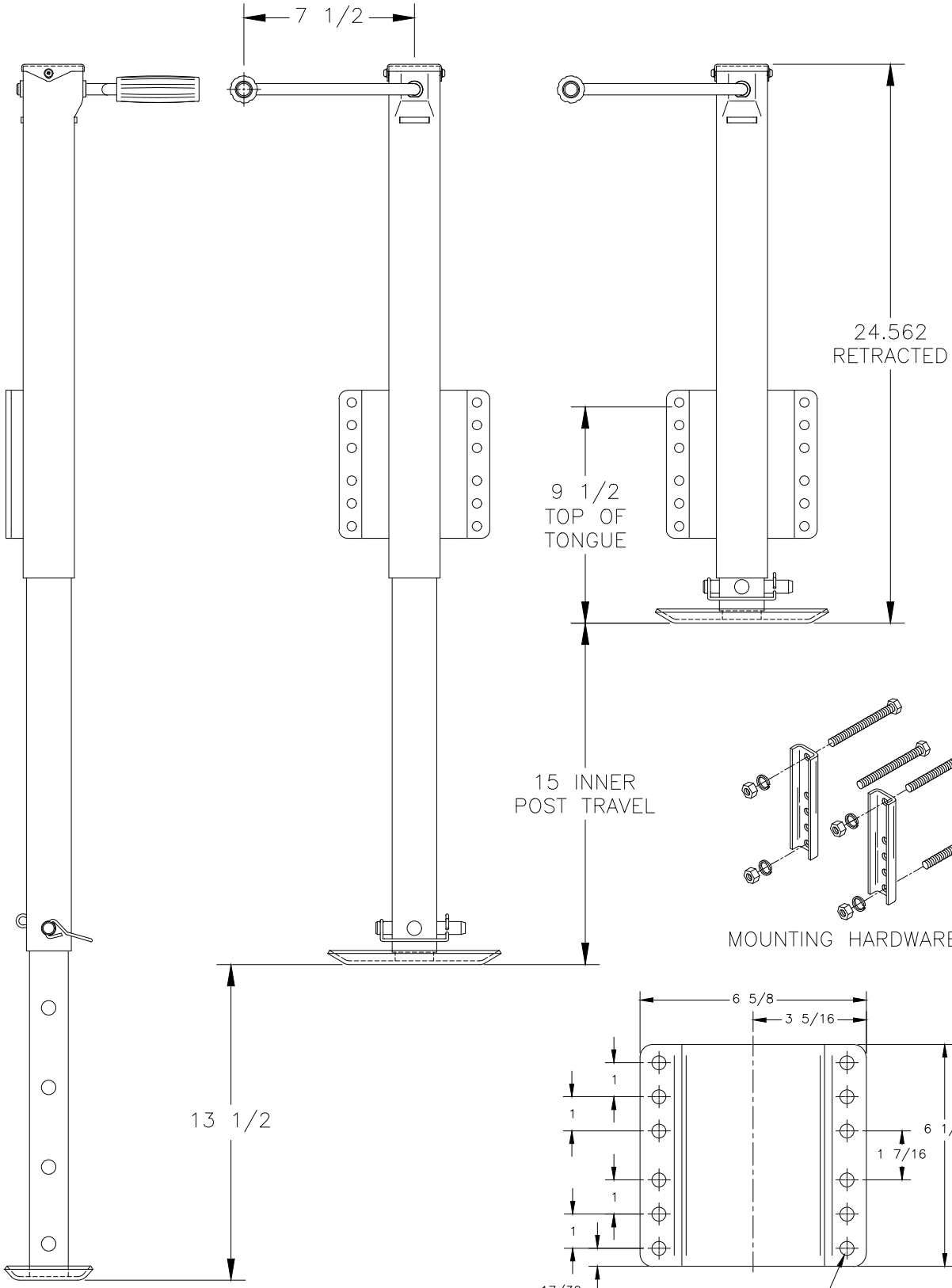


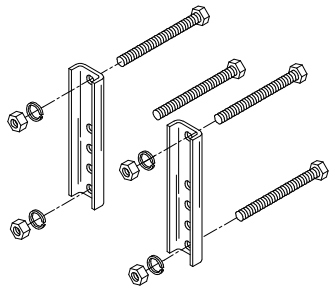

MOUNTING HARDWARE KIT

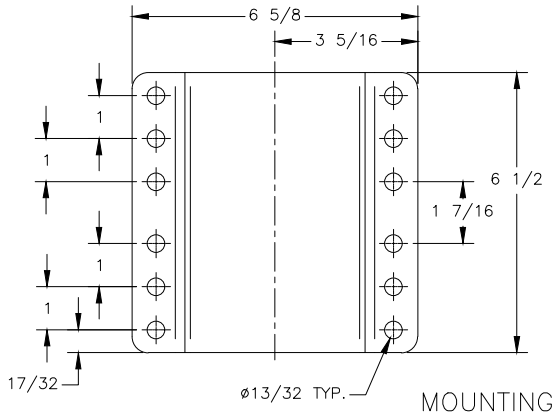


MOUNTING PLATE