MODEL

DLB1500A/DLB1505A

1500lb/681kg CAPACITY

BRAKE WINCH

FRONT & SIDE VIEW

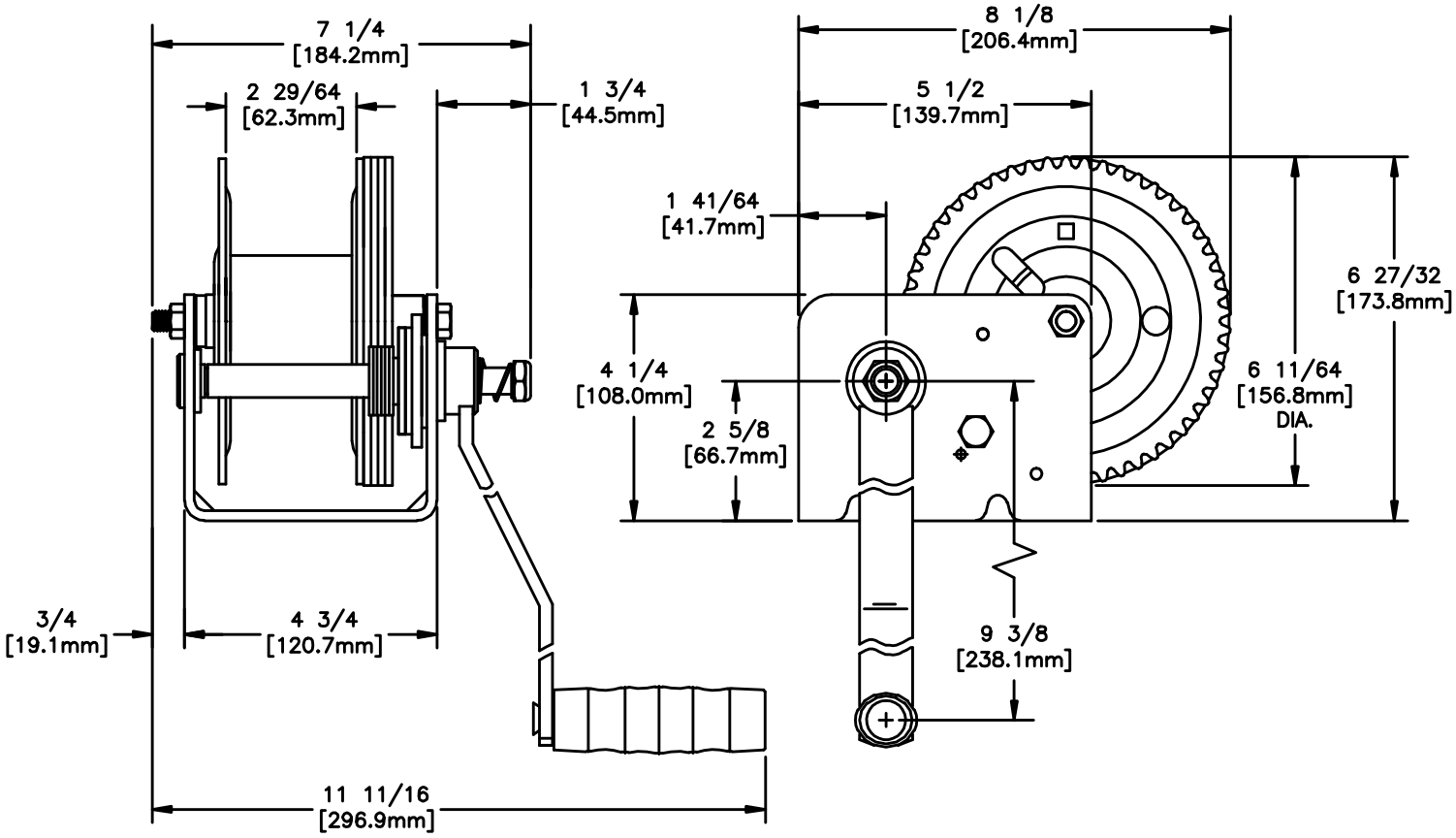
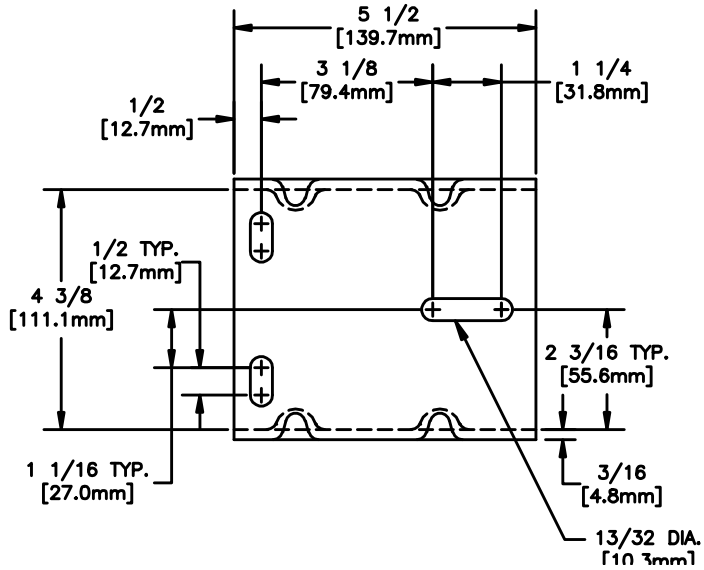
BASE HOLE PATTERN